murdock® SINCE 1853

DRINKING FOUNTAIN

A480CUSP Series

MODEL A4804000-CUSP

FULLY RECESSED,
WALL MOUNTED CUSPIDOR

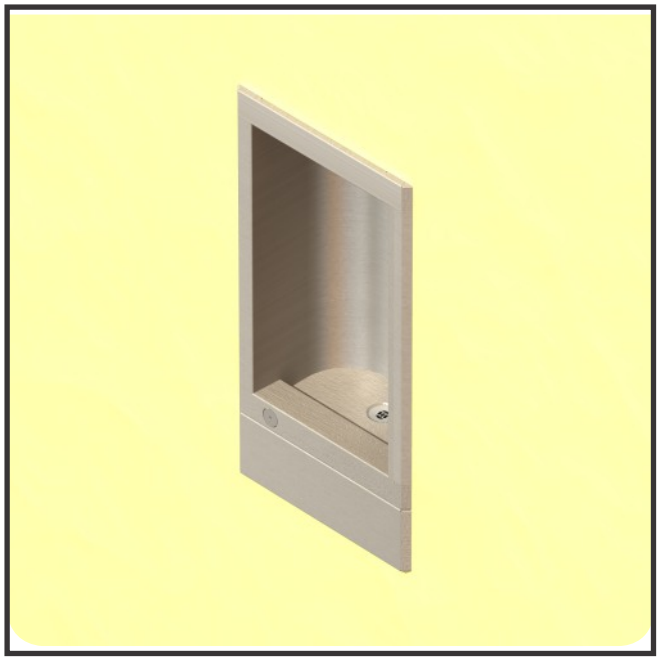

"INDOOR USE ONLY"

STANDARD FEATURES

- *18 gage, 304 stainless steel cabinet*
- *16 gage, galvanized mounting frame*
- *Polished chrome plated brass, washdown outlet*
- *100 mesh inlet strainer*
- *Vandal resistant screws*

SUGGESTED SPECIFICATIONS

Model A4804000-CUSP is a fully recessed, wall mounted, vandal resistant cuspidor made from 18 gage, 304 stainless steel with a brushed finish. Unit shall be activated by a surface mounted, chrome plated brass front pushbutton using less then 5 pounds of force. Washdown outlet shall be chrome plated brass and operates on a water pressure range of 20-105 psig. Unit shall be certified to Public Law 111-380 (NO-LEAD) and NSF/ANSI/CAN 61.

MODEL:

(Must Specify)

❑	A4804000-CUSP	Satin Stainless Finish

OPTIONS

(additional costs may be incurred)

-HP	High Polish

ASSECCORIES

(additional costs may be incurred)

❑ -WF1	1500 gallon capacity Water Filter (**See Note ***)
Coming soon	3000 gallon capacity Water Filter (**See Note ***)
❑	A9100080-A 8 GPH Remote Water Chiller (Recommended to be with 10 Feet of Fixture)

*** NOTE: For Optional -WF1 And -WF3000:**
Installer Responsible for Remotely Locating Water Filter.

Complies with the following standards:

Federal Public Law 111-380 (No Lead)

NSF/ANSI/CAN 61-2020

Product Warranty

⚠ WARNING: Cancer and Reproductive Harm - www.P65Warnings.ca.gov

MURDOCK® MFG. • 15125 Proctor Avenue • City of Industry, CA 91746 USA
Phone 800-453-7465 • www.murdockmfg.com

Member of MORRIS GROUP INTERNATIONAL

murdock®
SINCE 1853

DRINKING FOUNTAIN

A480CUSP Series

MODEL A4804000-CUSP

FULLY RECESSED,
WALL MOUNTED CUSPIDOR

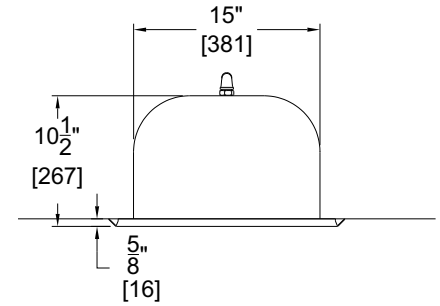

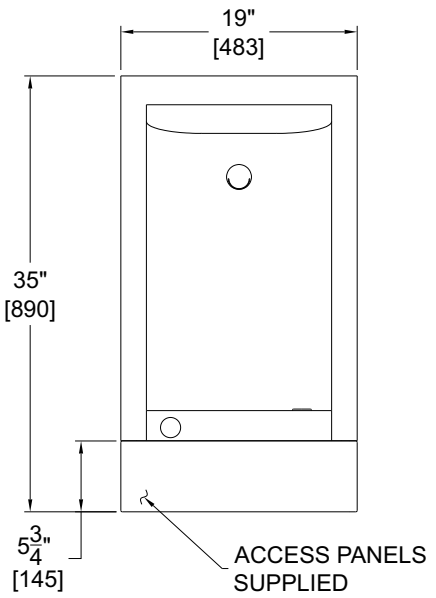

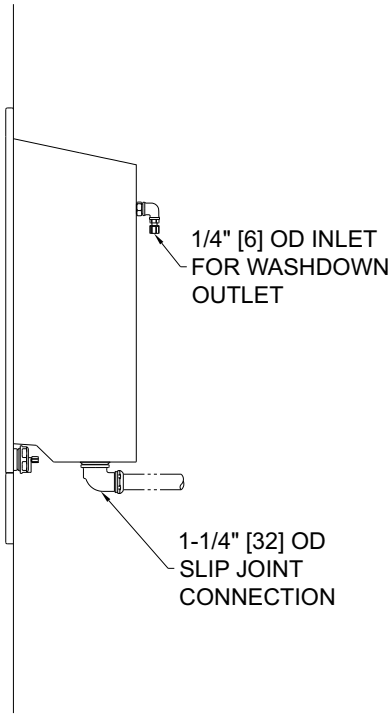

GENERAL NOTES:
1. ALL DIMENSIONS ARE IN INCHES [MM].
2. STOP VALVE NOT INCLUDED.

SELECTION SUMMARY & APPROVAL FOR MANUFACTURING

Model Number & Options_____ Quantity_____

Company_____

Contact_____ Title_____

Signature
(Approval for
Manufacturing)_____ Date _____

All dimensions are subject to manufactures tolerance of plus or minus 1/4" nominal and subject to change without notice. Murdock® assumes no responsibility for use of void or superseded data. Dimensions may change with the addition of optional accessories. Murdock® Mfg., Member of Morris Group International®. Please visit ***www.murdockmfg.com*** *for most current specifications.*

MURDOCK® MFG. • 15125 Proctor Avenue • City of Industry, CA 91746 USA
Phone 800-453-7465 • www.murdockmfg.com

Member of MORRIS GROUP INTERNATIONAL